MHT 10180
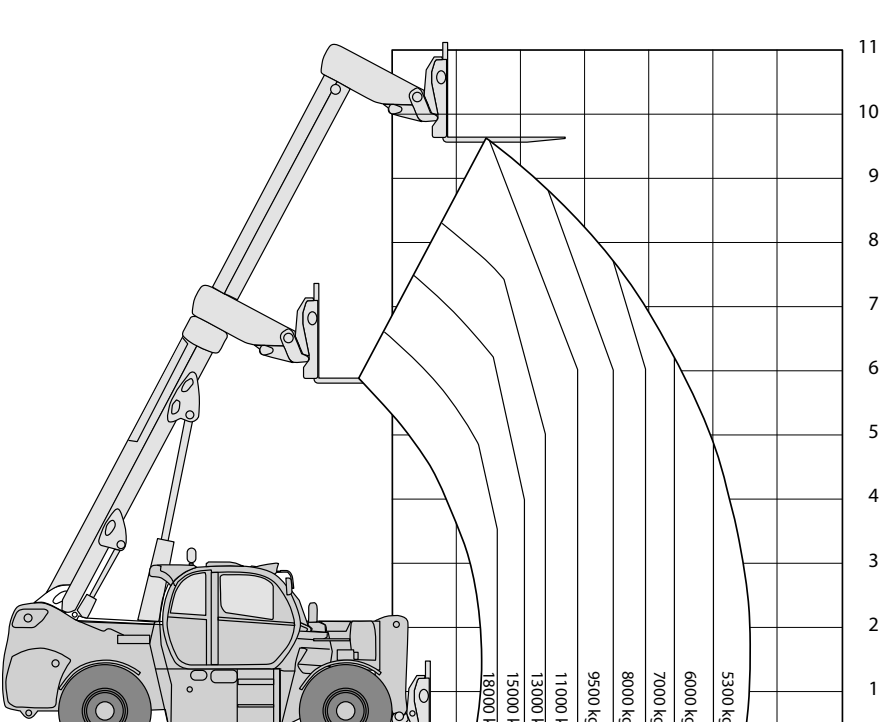
Lifting height	9,62 m
Max range	5,56 m
Lifting power/max range	5.300 kg
Lifting power	18000 kg
Length	6,65 m
Width	2,52 m
Height	3,00 m
Weight	24.000 kg
Usage	outdoor
Features	ad blue/airco/sideshift/fork positioner